Margrétarhagi
byggt af Bergfestu

Tæki á baðherbergi

Handlaug á baði	2
Handlaugartæki	3
Salerni	5
Niðurhal úr salerni	6
Niðurhalstakki	7
Handklæðaofn	8
Sturtutæki	10
Sturturenna	13

bergfesta.is/margretarhagi

TECHNICAL SHEET

Washbasin **Tânger S**

Reference: 18775XX2

Illustrative picture

COLOR	White	Blue York	Pergamon	Jade Green	Cherry	Blue Oil	Ivory	Slate	Black	Highcer	Bicolor
XX	00	07	20	28	33	44	46	47	48	60	98
	✓	✓	✓	✓	✓	✓	✓	✓	✓	✓	

Specifications:

- Material: Vitreous China
- Type of attachment: Recessed
- Water absorption: <0,05%
- Warranty: 20 years

Components / Accessories:

- Ref.: 55081031 — Chrome overflow lid
- Ref.: 55150110 — Fixing kit for recessed washbasins

Dimensions:

- Length: 495 mm
- Width: 340 mm
- Height: 155 mm
- Weight: 8,5 kg

| Technical drawing |

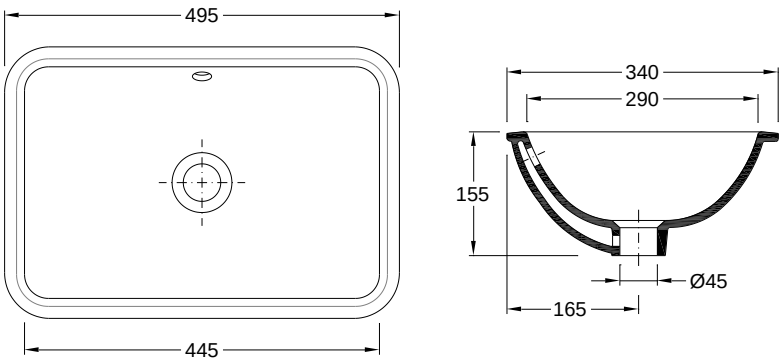

Recommendations:

- Avoid dropping objects on the ceramic that could damage the glaze causing irreparable scratches or cracks and damage to the finishing;
- Daily cleaning should be carried out with non-abrasive sanitary cleaning products, the use of cleaning detergents containing chlorine or acid is not recommended;
- Limestone residues can be removed with limestone or weak acid based cleaning agents.

Mora Cera B5

A bathroom is a place for relaxation, pleasure and recharging your batteries. So fill it with enjoyment. Save energy effortlessly, protect against fluctuations in water temperature, take an extra long shower with a clear conscience. Mora Cera puts quality time in your bathroom in countless ways.

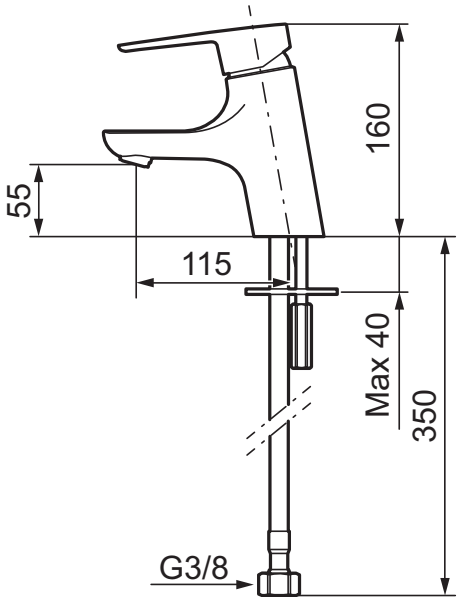

- ESS (energy saving system)
- Ceramic cartridge with soft closing function
- Adjustable flow control and temperature limiter
- Eco (energy and water saving constant flow aerator, 5 l/min at 200–600 kPa)
- Soft PEX® hoses with 3/8" connecting nut (stainless steel braided)
- Approved by the Rheumatism Association in Sweden
- Hole diameter Ø28-37 mm

Description	MA nr	EAN
Chrome	24 30 01.CA	7391887233999

Geberit Acanto wall-hung WC, washdown, shrouded, Rimfree

Example image

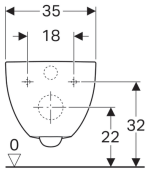

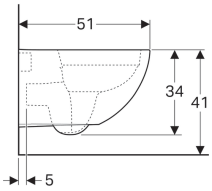

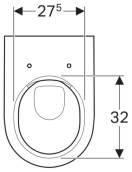

Application purposes

- For concealed cisterns
- For concealed flushing valves

Characteristics

- Wall-hung
- Washdown WC
- Rimfree
- Easy fastening with Geberit WC wall fixing type EFF2
- Type 1, full flush volume 6 / 5 / 4 l, in accordance with EN 997
- Type 2 in accordance with EN 997
- Flushes with 4.5 l
- Shrouded

Technical data

Product material	Vitreous china

Scope of delivery

- Fastening material

To order additionally

- WC seat

Art. no.	Colour / surface	B	H	T
500.600.01.2	white	35 cm	34 cm	51 cm

Accessories

- Geberit fastening material for wall-hung WCs and wall-hung bidets
- Geberit straight connector set for WC

- Depending on the installation type, an extended Geberit connection set for wall-hung WC is required for mounting
- Recommended for Geberit Sigma, Omega and Kappa concealed cisterns

Geberit Acanto WC seat

Example image

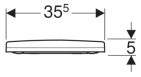

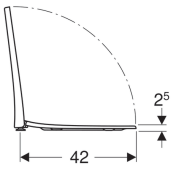

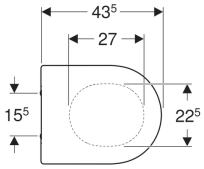

Characteristics

- Overlapping WC lid
- Slim design
- Antibacterial

Technical data

Product material	Duroplast

Art. no.	Colour / surface	Quick-release hinges	Soft-closing mechanism	Fastening	Hinge material
500.604.01.2	white	no	no	from above	Brass chrome-plated
500.605.01.2	white	yes	yes	from above	Brass chrome-plated
500.660.01.2	white	no	yes	from above	Brass chrome-plated

Geberit Duofix WC-element, 114 cm, med Sigma indbygningscisterne 8 cm

Eksempelbillede

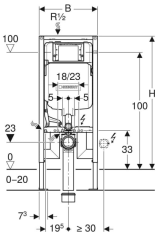

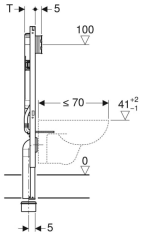

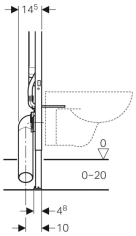

Anvendelser

- Til let byggeri
- Til montering i halvhøje eller hele installationsvægge med fast bagvæg
- Til montering i hele installationsvægge
- Til væghængte toiletter med tilslutningsmål iht. EN 33:2011
- Til pladskrævende væghængte toiletter op til 70 cm
- Til enkelt-, dobbelt- eller skyl-stop-skylning
- Til gulvkonstruktioner 0–20 cm

Egenskaber

- Serie 2016
- Selvstøttende ramme pulverlakeret
- Ramme med borehuller ø 9 mm til fastgørelse i træskelet
- Ramme egnet til WC-skåle med lille kontaktflade (i forbindelse med trykfast vægbelægning)
- Fodstøtte forzinket
- Fodstøtte trinløst højdeindstillelig
- Fodstøtte med skridsikring
- Fodpladedybde, der passer til montering i en U-profil UW 50 og Geberit Duofix systemskinner
- Afløbsbøjning i forskellige dybdepositioner kan monteres uden brug af værktøj
- Afløbsbøjning kan monteres lodret i tætsluttende dybdeposition foran
- Afløbsbøjning forlænget, til tilslutning i gulvet
- Beslag afløbsbøjning lydisoleret
- Indbygningscisterner med front betjening
- Indbygningscisterne kondensvandisoleret
- Ved fabriksindstilling mulighed for øjeblikkeligt efterskyl
- Monterings- og servicearbejde på indbygningscisterne uden værktøj
- Vandtilslutning oppe til venstre
- Montagekasse beskytter mod fugt og smuds
- Montagekasse kan afkortes, passer til betjeningsplader i niveau med overfladen
- Udstyret med tomrør til føderør til tilslutning af Geberit AquaClean doucheWC'er
- Med mulighed for montering til eltilslutning

Tekniske data

Vandstrømstryk	0.1-10 bar
Maksimal vandtemperatur	25 °C
Skyllemængde fabriksindstilling	6 og 3 l
Indstillingsområde for stor skyllemængde	4.5 / 6 / 7.5 l
Indstillingsområde for lille skyllemængde	3-4 l

Leverancens indhold

- Vandtilslutning Rp 1/2" - R 1/2", MF-kompatibel, med integreret hjørneventil og håndhjul
- Montagekasse
- 2 vægbeslag
- Tilslutningssæt til WC, ø 90 mm
- Afløbsbøjning 90° af PE-HD, ø 90 mm
- Klosetmuffe af PE-HD, ø 90/110 mm
- 2 beskyttelsespropper
- 2 gevindstænger M12
- Monteringsbeslag

Varenr.	B	H	T
111.796.00.1	50 cm	114 cm	8 cm

Tilbehør

- Geberit Duofix sæt vægbeslag til enkelt- og systemmontering
- Geberit Duofix fastgørelsesmateriale til afstand mellem elementer 50–57,5 cm
- Geberit Duofix sæt forlængelser af fødder til gulvkonstruktion 20–40 cm

- For PEX-tilslutning bestilles: 241.526.00.1 vandtilslutning, 242.696.00.1 PEX-fixering, 241.882.00.1 (15 mm PEX) eller 241.883.00.1 (16 mm PEX)

Geberit flush plate Sigma01 for dual flush

Example image

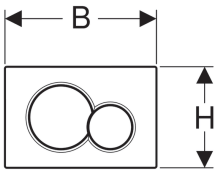

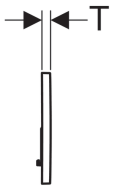

Application purposes

- For flush actuation with Geberit Sigma concealed cisterns

Characteristics

- Front actuation
- Sound-absorbing actuator rods, tool-free fast adjustment

Technical data

Actuation force	< 20 N

Scope of delivery

- Mounting frame
- 2 distance bolts
- 2 actuator rods

Art. no.	Surface / colour	Material designation	B	H	T
115.770.11.5	white alpine	Plastic	24.6 cm	16.4 cm	1.3 cm
115.770.21.5	gloss chrome-plated	Plastic	24.6 cm	16.4 cm	1.3 cm
115.770.46.5	matt chrome-plated	Plastic	24.6 cm	16.4 cm	1.3 cm
115.770.DT.5	fine brass galvanized	Plastic	24.6 cm	16.4 cm	1.3 cm
115.770.DW.5	jet black RAL 9005	Plastic	24.6 cm	16.4 cm	1.3 cm
115.770.KA.5	Plate: gloss chrome-plated Buttons: matt chrome-plated	Plastic	24.6 cm	16.4 cm	1.3 cm
115.770.LA.5	Plate: white Full flush volume button: yellow Partial flush volume button: green	Plastic	24.6 cm	16.4 cm	1.3 cm
115.770.LB.5	Plate: white Full flush volume button: blue Partial flush volume button: red	Plastic	24.6 cm	16.4 cm	1.3 cm

Accessories

- Insert for Geberit DuoFresh stick, for Sigma concealed cistern 12 cm
- Insert for Geberit DuoFresh stick, for Sigma concealed cistern 12 cm
- Insert for Geberit DuoFresh stick, for Sigma concealed cistern 8 cm
- Geberit DuoFresh module with automatic activation and insert for Geberit DuoFresh block, for Sigma concealed cistern 12 cm
- Geberit DuoFresh module with automatic activation and insert for Geberit DuoFresh stick, for Sigma concealed cistern 8 cm
- Geberit DuoFresh module with manual activation and insert for Geberit DuoFresh stick, for Sigma concealed cistern 12 cm
- Geberit DuoFresh module with manual activation and insert for Geberit DuoFresh stick, for Sigma concealed cistern 8 cm
- Geberit extension set for Sigma, Omega and Kappa concealed cisterns

ULISSE

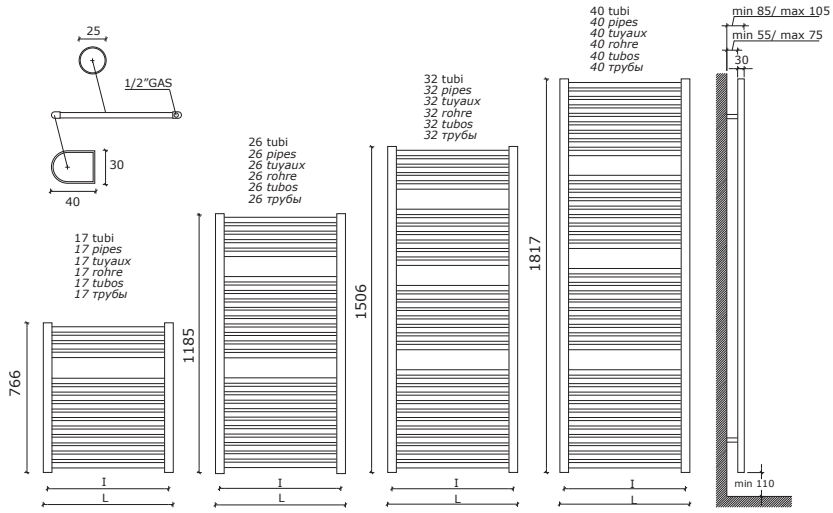

Interasse dal centro foro al muro
min. 70 / max 90 mm.

Distance between hole center and wall
min. 70 / max 90 mm.

Distance du centre du trou au mur
min. 70 / max 90 mm.

Abstand zwischen Lochmitte und Wand
min. 70 / max 90 mm.

Distancia entre el centro del agujero
y el muro min. 70 / máx 90 mm.

Расстояние между центром отверстия и стеной
– не менее 70 мм и не более 90 мм.

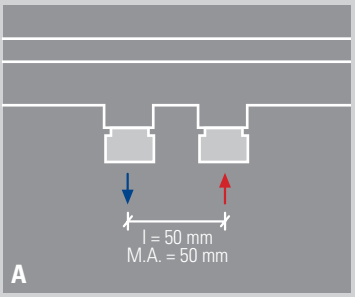

Il modello Ulisse è disponibile, a richiesta, con interasse 50 mm.
Ulisse is available, on request, with a distance between centers of 50 mm.
Le modèle Ulisse est disponible sur demande avec un entraxe de 50 mm.
Der Heizkörper Ulisse ist, auf Anfrage, mit Mittelanschluss 50mm verfügbar.
El modelo Ulisse está disponible, bajo pedido, con una distancia entre centros de 50 mm.
Модель Ulisse имеется, под заказ, с межосевым расстоянием 50 мм.

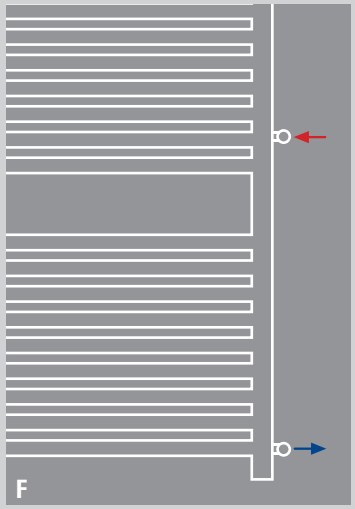

Allacciamento laterale destro oppure sinistro a richiesta, ideale per sostituire un vecchio radiatore.
Lateral connection on request, ideal when replacing an old radiator.
Raccordement latéral sur demande, idéal pour remplacer un radiateur précédent.
Seitlicher Anschluss auf Anfrage, ideal zum Austauschen eines alten Heizkörpers.
Conexión lateral bajo pedido, ideal para reemplazar un radiador antiguo.
Подключение боковое правое или левое под заказ, идеально для замены старого радиатора

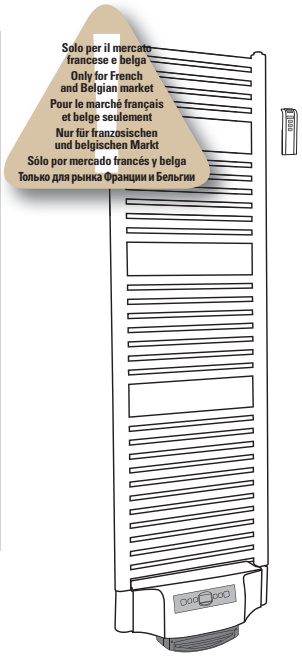

Ulisse è disponibile anche in **versione solo elettrica** (in questo caso al prezzo del radiatore si deve aggiungere il costo della resistenza elettrica e del supplemento) o in **versione mista** (che prevede l'allacciamento all'impianto sia idraulico sia elettrico, in questo caso al prezzo del radiatore si deve aggiungere il costo della sola resistenza elettrica già compreso di raccordo T).	Ulisse is available also in all **electric version** (in this case add to the cost of the radiator the price of the electric element and the extra-charge) or in **dual energy version** (connection to water heating system and electricity, in this case add to the cost of the radiator the price of the only electric element, which includes the T piece).	Ulisse est disponible aussi en **version seulement électrique** (dans ce cas il faudra ajouter au prix du radiateur le côut de la résistance électrique et du supplément) ou en **version mixte** (raccordement au circuit soit de chauffage soit électrique, dans ce cas il faudra ajouter au prix du radiateur le côut de la seule résistance électrique déjà inclus du raccord T).	Ulisse ist auch in **elektrischer Ausführung** lieferbar (Preis des Heizkörpers + Heizstab + Zuschlag) oder in **gemischter Ausführung** lieferbar (Preis des Heizkörpers + Heizstab, T-Anschluss inbegriffen). Siehe Seite 146-147.	Ulisse puede ser instalado también en **version solo eléctrica** (en este caso es necesario adicionar al precio del radiador el coste de la resistencia y del suplemento) o en **version mixta** (enlance a l'electricidad y a la calefación, en este caso es necesario adicionar al precio del radiador el coste de la sola resistencia, el racor en T es incluso en el precio).	Модель Ulisse имеется также в **электрическом варианте** (в этом случае, к цене радиатора следует добавить стоимость электротена и наценку) или в **смешанном варианте** (где предусмотрено подключение как к гидравлической, так и к электрической сети; в этом случае, к цене радиатора следует добавить только стоимость электротена, в комплект которого уже входит тройное соединение).

caleido

ULISSE

EN 442 EURONORM

codice code code Artikel Nr. codigo код	altezza height hauteur Höhe altura высота H mm	larghezza width largeur Breite ancho ширина L mm	interasse distance between bars entraxe Achsabstand distancia entre centros межцентровое расстояние I mm	*Watt = Kcal/h ÷ 0,860* *Kcal/h = Watt × 0,860* output - verniciato output - painted output - peint Output - lackiert output - pintado мощность - окрашенный 75/65-20 watt/kcal/h Δt50	55/45-20 watt/kcal/h Δt30	55/45-24 watt/kcal/h Δt26
400725	766	400	352	330	179	151
450725	766	450	402	362	196	165
500725	766	500	452	396	214	181
550725	766	550	502	430	233	196
600725	766	600	552	463	250	211
750725	766	750	702	565	305	256
100725	766	1000	952	735	395	332
401225	1185	400	352	486	259	217
451225	1185	450	402	538	287	241
501225	1185	500	452	592	316	265
551225	1185	550	502	646	345	289
601225	1185	600	552	700	373	313
751225	1185	750	702	862	460	386
101225	1185	1000	952	1132	604	506
401525	1506	400	352	612	327	274
451525	1506	450	402	671	358	300
501525	1506	500	452	733	391	328
551525	1506	550	502	795	425	356
601525	1506	600	552	858	458	385
751525	1506	750	702	1045	559	469
101525	1506	1000	952	1356	727	611
401825	1817	400	352	750	397	332
451825	1817	450	402	830	439	367
501825	1817	500	452	909	481	403
551825	1817	550	502	988	524	439
601825	1817	600	552	1067	566	474
751825	1817	750	702	1303	694	582
101825	1817	1000	952	1697	908	763

★ materiale disponibile a magazzino, salvo venduto. ★ goods available on stock, except sold items. ★ marchandise disponible en stock, sauf déjà vendu. ★ im Lager verfügbare Ware, wenn nicht bereits verkauft. ★ material disponible en estoc, salvo el vendido. ★ изделие имеется в наличие на складе, за исключением проданного.

★ materiale disponibile a magazzino con interasse 50 mm, salvo venduto. ★ goods with 50 mm central connection available on stock, except sold items. ★ marchandise disponible en stock avec entraxe centrale 50 mm, sauf déjà vendu. ★ im Lager verfügbare Ware mit 50mm Mittelanschluss, wenn nicht bereits verkauft. ★ Material disponible en estoc con distancia entre centros de 50 mm, salvo el vendido. ★ На складе имеются варианты с межосевым расстоянием 50 мм, до полной распродажи.

I radiatori sono completi di kit di fissaggio a parete e valvola di sfiato. Per il solo modello Ulisse l'azienda è disponibile, su richiesta, a produrre fuori misura il cui costo è a preventivo. Il modello Ulisse, inoltre è disponibile, sempre su richiesta, nella versione con i fori laterali. Materiale: acciaio al carbonio. Pressione di collaudo: 10,5 bar Pressione di esercizio: 7 bar	The radiators are equipped with a kit for fixing them to the wall and with an exhaust valve. Only for Ulisse model customised-sizes radiators can be produced on request, for which individual prices will be quoted. On request the Ulisse model can be supplied with side holes. Material: carbon-steel. Testing pressure: 10,5 bar Working pressure: 7 bar	Les radiateurs sont munis d'un kit de fixation murale et d'une soupape de décompression. Pour le modèle Ulisse seul, le fabricant peut produire hors dimensions sur demande; le prix sera établi par devis. Le modèle Ulisse peut aussi être fourni, toujours sur demande, dans la version à trous latéraux. Matière: Acier au charbon. Pression d'essai: 10,5 bars Pression d'exercice: 7 bars	Die Heizkörper sind mit Wandbefestigungsset und Luftventil ausgerüstet. Auf Anfrage des Kunde und nach Kostenvoranschlag kann das Modell Ulisse nach Maß gefertigt werden. Auf Anfrage kann das Modell Ulisse mit seitlichen Anschlüssen gefertigt werden. Stoff: Kohlenstoffstahl. Prüfungsdruck: 10,5 bar Betriebsdruck: 7 bar	Los radiadores están provistos de kit de fijación a la pared y de válvula de desahogo. Únicamente para el modelo Ulisse, la empresa está dispuesta, bajo pedido, a fabricar fuera de medida al precio que se definirá en el presupuesto. El modelo Ulisse también está disponible, bajo pedido, en la versión con agujeros laterales. Material: Acero de carbono. Presión de ensayo: 10,5 bar Presión de trabajo: 7 bar	Радиаторы укомплектованы набором крепежных деталей для закрепления на стене и выпускным клапаном. Только модель Ulisse, под заказ, может быть изготовлена в другом размере по стоимости по предварительной договоренности Кроме этого, модель Ulisse, под заказ, может выполняться в варианте с боковыми отверстиями. Материал – углеродистая сталь. Давление при испытании – 10,5 бар Рабочее давление – 7 бар

⚠ Le rese dei radiatori cromati sono circa il 25% inferiori rispetto a quelle dei radiatori verniciati.	⚠ For chromed radiators output please consider about 25% less than painted radiators.	⚠ Les rendements des radiateurs chromés sont 25% environ inférieur aux rendements des radiateurs peints.	⚠ Die Leistungsabgabe der verchromten Heizkörper ist ca. 25% niedriger als bei farbigen Heizkörpern.	⚠ Las rendiciones de los radiadores cromados están acerca de 25% inferiores de las rendiciones de los radiadores barnizados.	⚠ Электрический КПД хромированных радиаторов примерно на 25% ниже относительно окрашенных радиаторов.

Shower system kit MORA INXX II

With its durable chrome finish the INXX II combines classic design with high performance, constant temperature, outstanding comfort and effective scald protection. The overhead shower has a large, slim shower head that looks great in bathrooms with a strong character and striking shapes, as well as in classic bathrooms designed for rest and relaxation. The mixer has been tested and approved according to current building regulations and is energy-efficient, which means it reduces water and energy use without compromising on comfort. The INXX II collection offers a world-class water experience.

About the collection

INXX II is an elegant, timeless collection in a palette of carefully selected colours. Offering a combination of high quality, sober design and outstanding comfort, this is the ultimate collection.

Article number: 271900

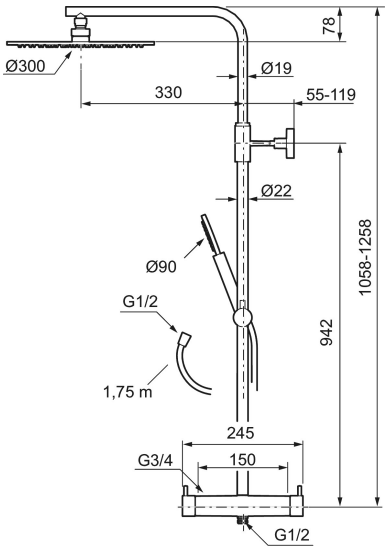

MORA INXX II thermostatic mixer:

- Pressure balanced thermostatic mixer
- With reversible headwork
- Temperature handle with safety stop at 38°C
- With Eco-function
- Approved non-return valves, EN-Standard EN1717

MORA INXX II Shower System:

- Shower hose in metal, PVC- and BPA-free
- With Easy-Clean anti-limescale system
- Adjustable height
- Hand shower 98 l/min, shower head 12 l/min

PRODUCT DESCRIPTION

Shower system kit MORA INXX II

With its durable chrome finish the INXX II combines classic design with high performance, constant temperature, outstanding comfort and effective scald protection. The overhead shower has a large, slim shower head that looks great in bathrooms with a strong character and striking shapes, as well as in classic bathrooms designed for rest and relaxation. The mixer has been tested and approved according to current building regulations and is energy-efficient, which means it reduces water and energy use without compromising on comfort. The INXX II collection offers a world-class water experience.

About the collection

INXX II is an elegant, timeless collection in a palette of carefully selected colours. Offering a combination of high quality, sober design and outstanding comfort, this is the ultimate collection.

Article number: 271900

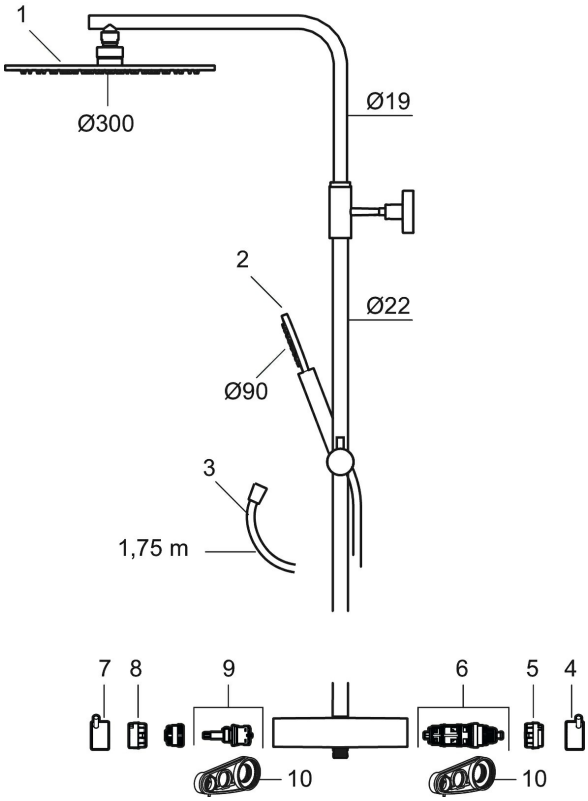

Sparepartlist

NO.	ART NO.	RSK	DESCRIPTION
1	130348	8237489	Shower head 300 mm, chrome
1	130348.12	8237490	Shower head 300 mm, matte black

NO.	ART NO.	RSK	DESCRIPTION
1	130348.22	8237491	Shower head 300 mm, matte white
1	130348.44	8237492	Shower head 300 mm, matte grey
1	130348.60	8237493	Shower head 300 mm, polished brass PVD
1	130348.62	8237494	Shower head 300 mm, brushed brass PVD
2	209575	8275496	Hand shower, chrome
2	209575.12	8275497	Hand shower, matte black
2	209575.22	8275498	Hand shower, matte white
2	209575.44	8275499	Hand shower, matte grey
2	209575.60	8275500	Hand shower, polished brass PVD
2	209575.62	8275501	Hand shower, brused brass PVD
3	131170.AE	8251927	Shower hose in metal, 1750 mm, chrome
3	131170.12AE	8251999	Shower hose in metal, 1750 mm, matte black
3	131170.22AE	8252000	Shower hose in metal, 1750 mm, matte white
3	131170.44AE	8252001	Shower hose in metal, 1750 mm, matte grey
3	131170.60AE	8252002	Shower hose in metal, 1750 mm, polished brass PVD
3	131170.62AE	8252003	Shower hose in metal, 1750 mm, brused brass PVD
4	409710.AE	8218902	Temperature handle, chrome
4	409710.12AE	8218903	Temperature handle, matte black
4	409710.22AE	8218904	Temperature handle, matte white
4	409710.44AE	8218905	Temperature handle, matte grey
4	409710.60AE	8218906	Temperature handle, polished brass PVD
4	409710.62AE	8218907	Temperature handle, brused brass PVD
5	S600023	8439703	Stop ring
6	S600019	8439702	Thermostatic cartridge, complete, with service tool
7	409711.AE	8218901	Temperature handle, chrome
7	409711.12AE	8218908	Temperature handle, matte black
7	409711.22AE	8218909	Temperature handle, matte white
7	409711.44AE	8218910	Temperature handle, matte grey
7	409711.60AE	8218911	Temperature handle, polished brass PVD
7	409711.62AE	8218912	Temperature handle, brused brass PVD
8	S600022	8439704	Stop ring, reversible
9	S600020	8441462	Ceramic headwork, reversible, with service tool
10	891096.AE	8345921	Service tool

DATA SHEET

1002.0900

Line 1002

For shower cubicle with open right side, glass screen or similar

规格

产品编号	GTIN号码	重量（含包装）
1002.0900	5707692003108	2940 g
重量（不含包装）	**材料**	**用法**
2540 g	1,5 mm stainless steel (AISI 304)	Line drain
表面	**薄膜**	**地板结构**
Pickled	Liquid or sheet membrane	All
地板	**安装**	**中央 (C)**
Tiles	6 mm plugs 6 mm screws. Torx 20	451 mm
安装长度(L)	**高度(H)**	**长度模型**
957 mm	19 mm	900 mm

DATA SHEET

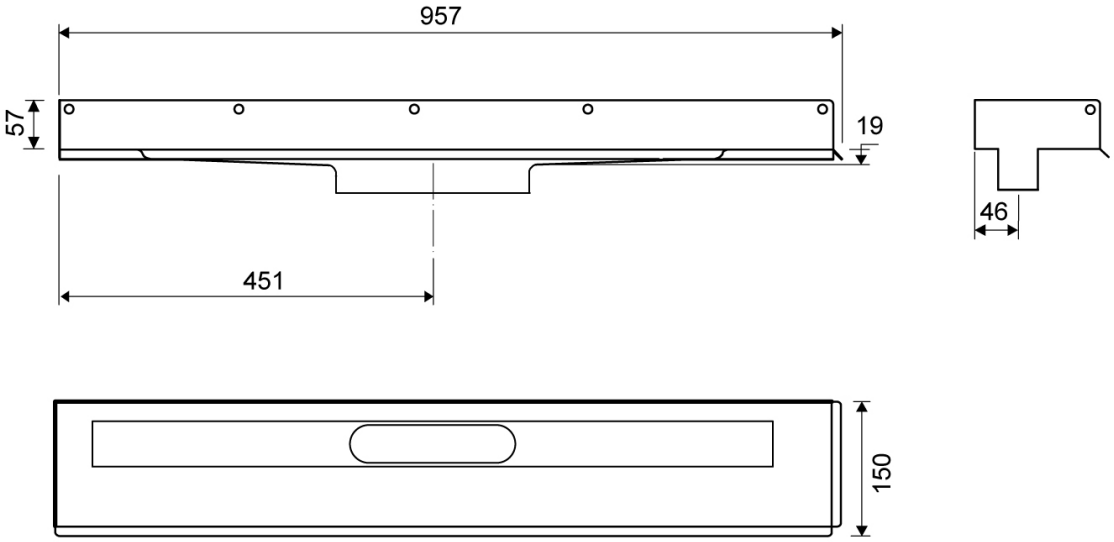

1002.0900

□□